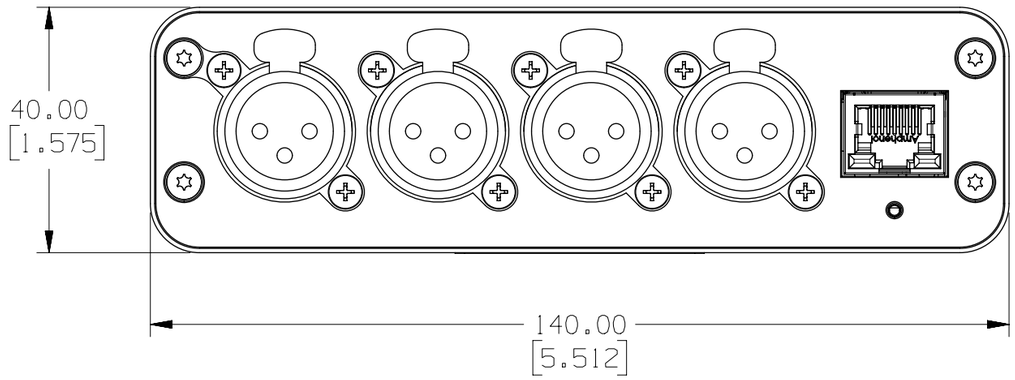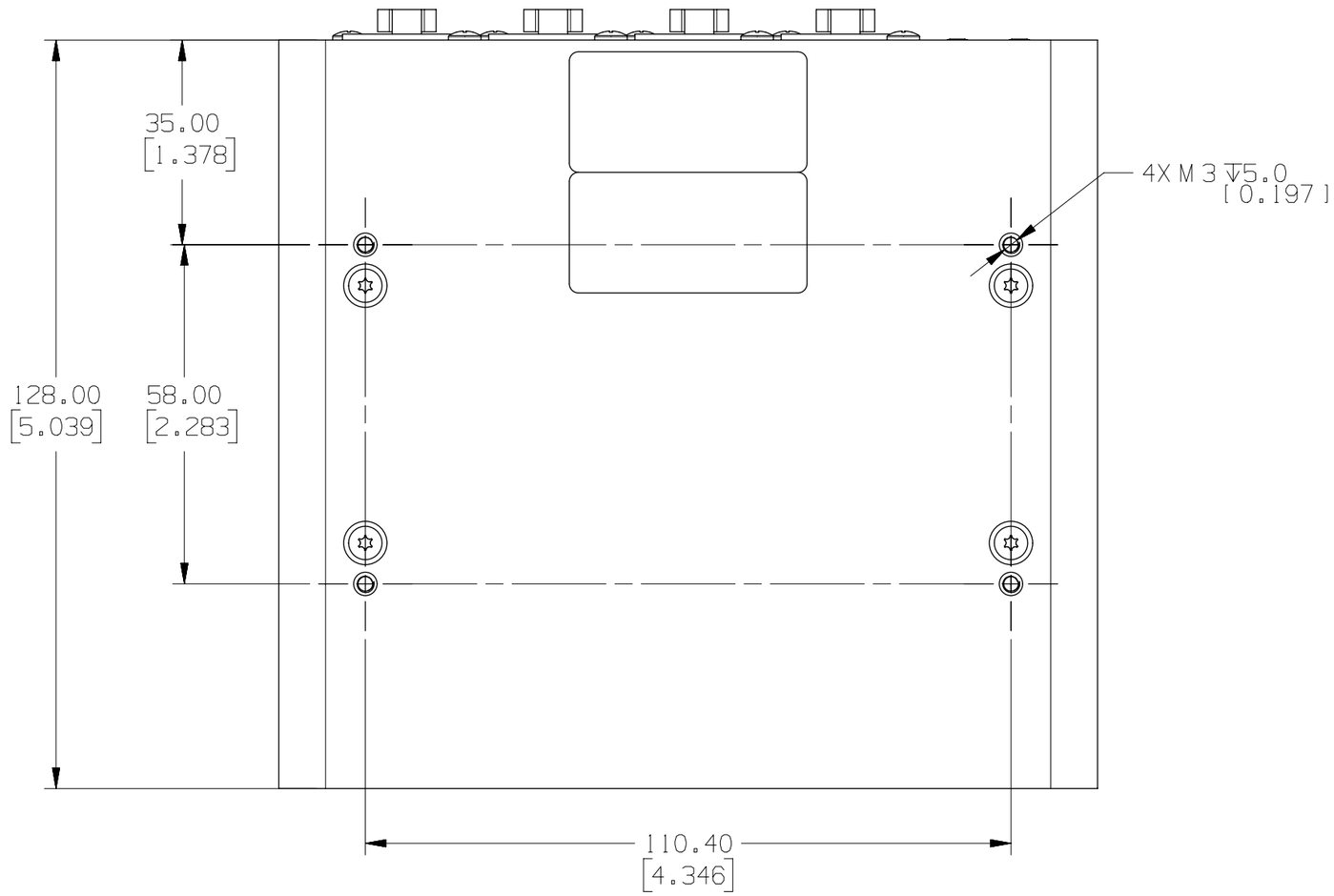SHURE 4CH MIC/LINE IN-DNTE,XLR