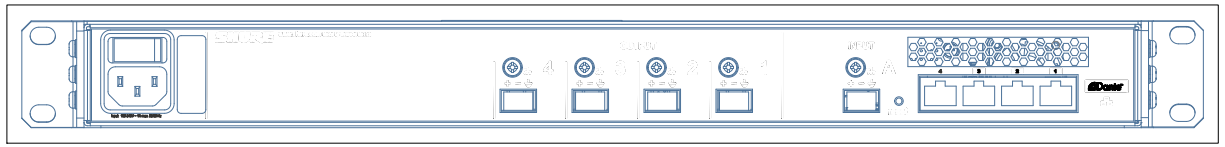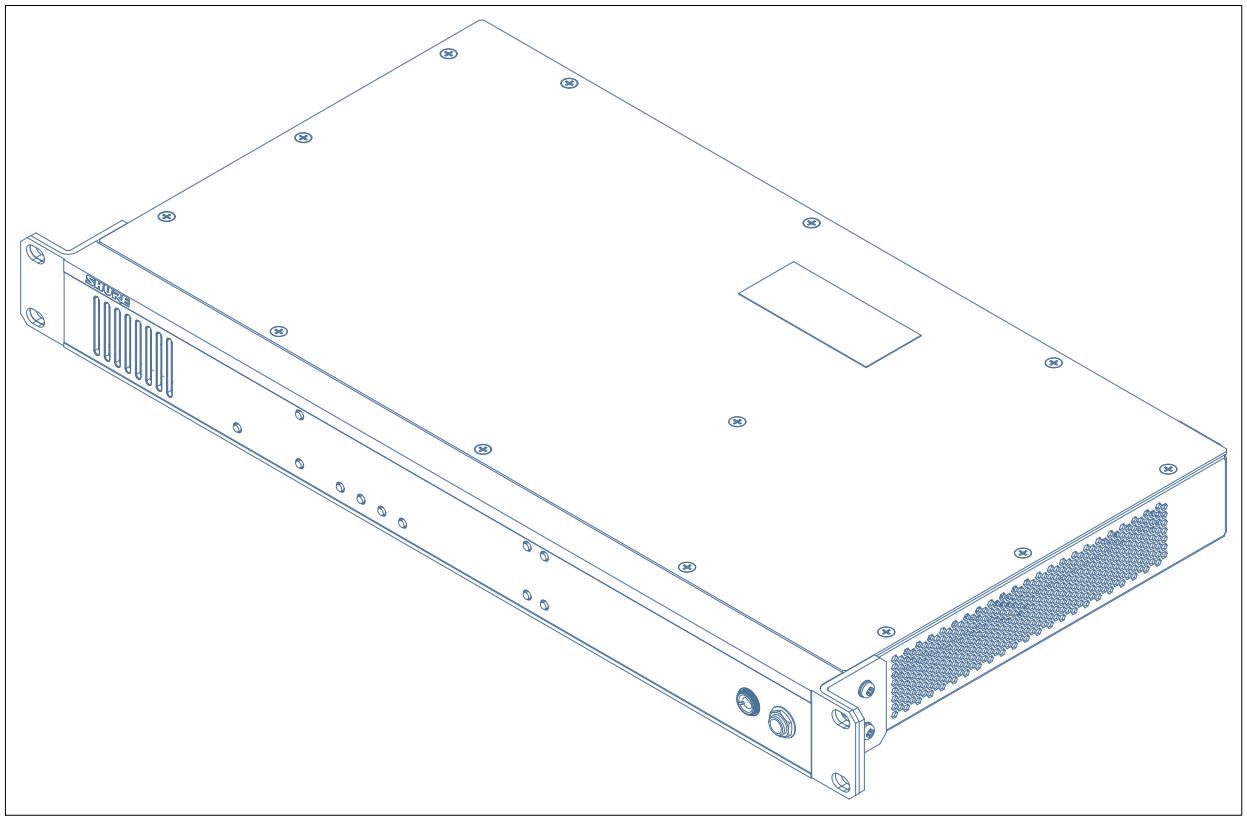MXWANI4
MICROFLEX® WIRELESS
push to solo | hold to mute